SLV GmbH Art.-no. 115600 / 115451

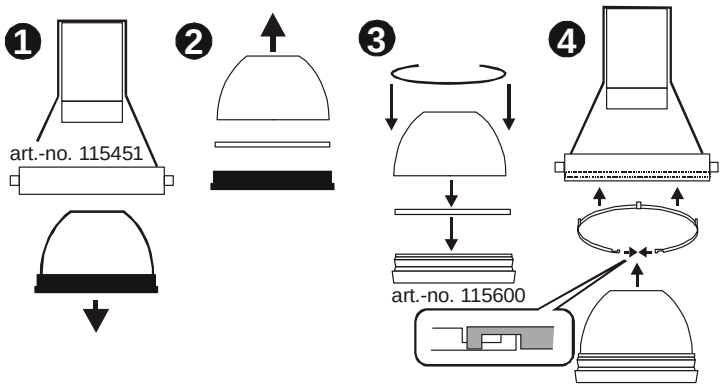

© 2017

SLV GmbH Art.-no. 115600 / 115451

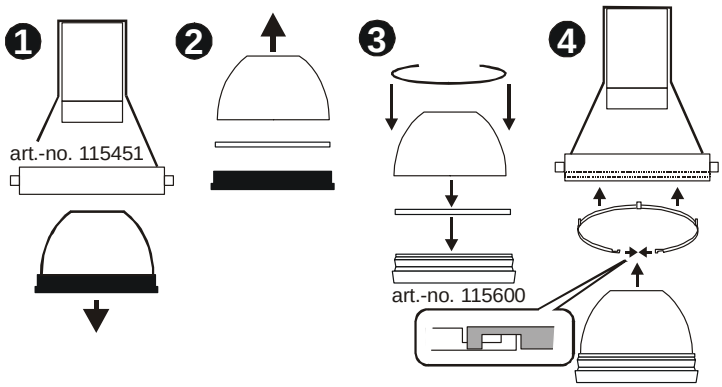

© 2017

SLV GmbH Art.-no. 115600 / 115451

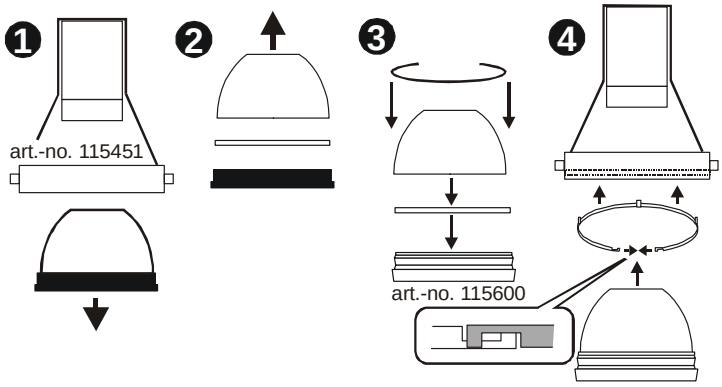

© 2017

SLV GmbH Art.-no. 115600 / 115451

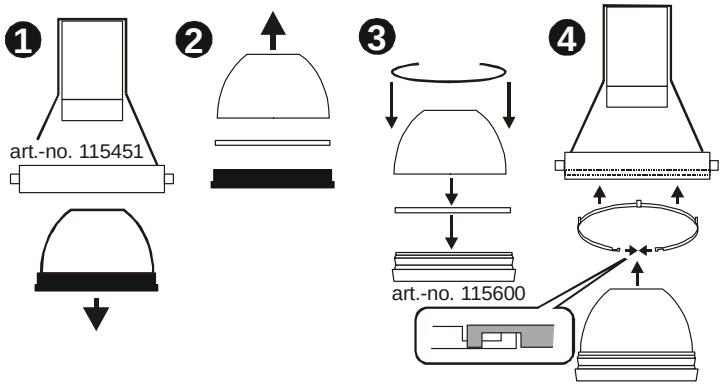

© 2017

SLV GmbH Art.-no. 115600 / 115451

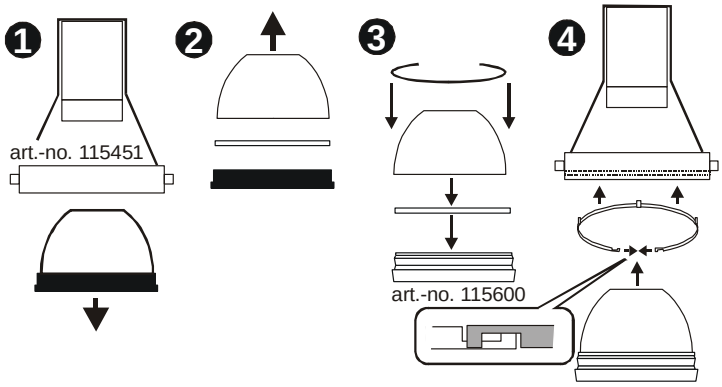

© 2017

SLV GmbH Art.-no. 115600 / 115451

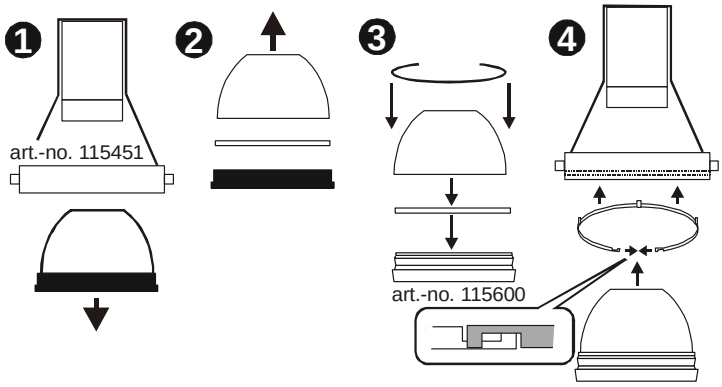

© 2017

SLV GmbH Art.-no. 115600 / 115451

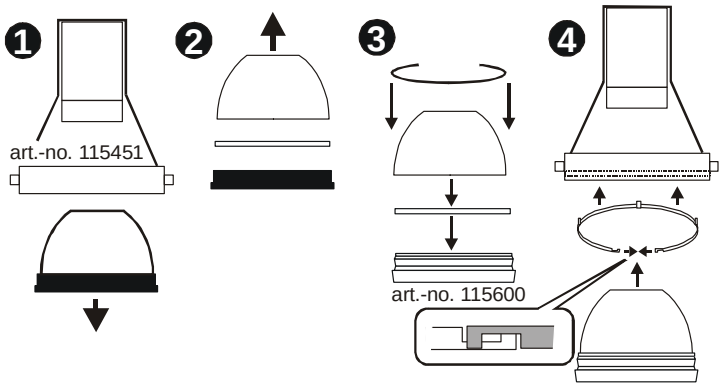

© 2017

SLV GmbH Art.-no. 115600 / 115451

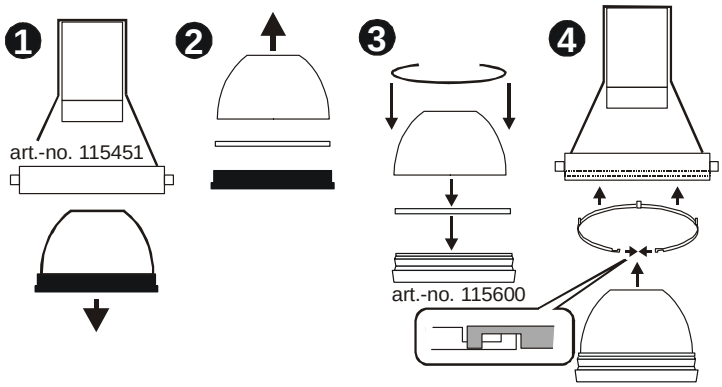

© 2017

SLV GmbH art.-no. 115600 / 115001…11…71

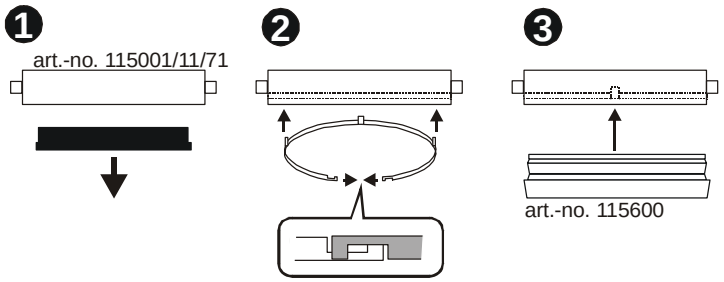

© 2017

SLV GmbH art.-no. 115600 / 115001…11…71

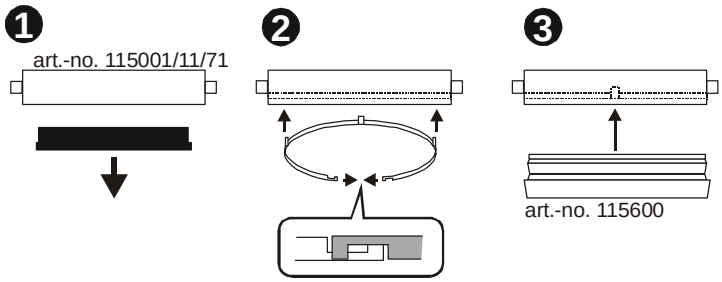

© 2017

SLV GmbH art.-no. 115600 / 115001…11…71

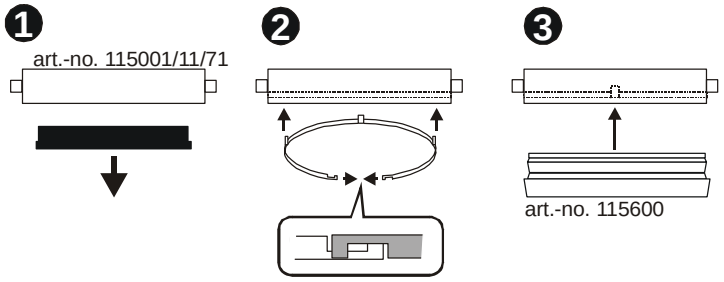

© 2017

SLV GmbH art.-no. 115600 / 115001…11…71

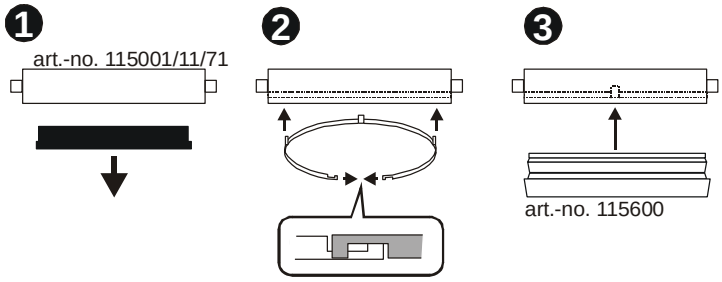

© 2017

SLV GmbH art.-no. 115600 / 115001…11…71

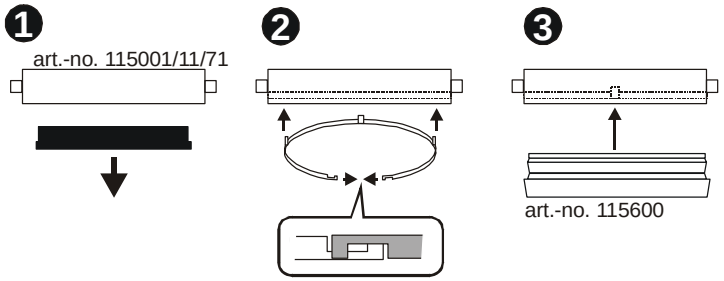

© 2017

SLV GmbH art.-no. 115600 / 115001…11…71

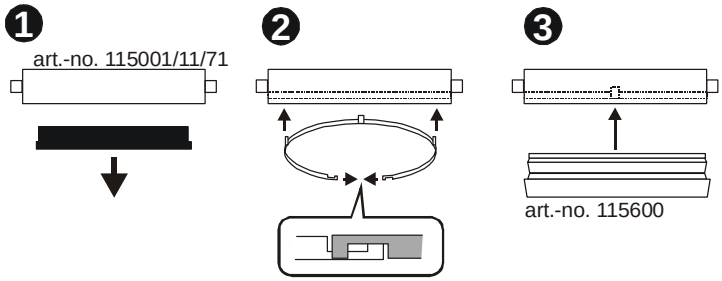

© 2017

SLV GmbH art.-no. 115600 / 115001…11…71

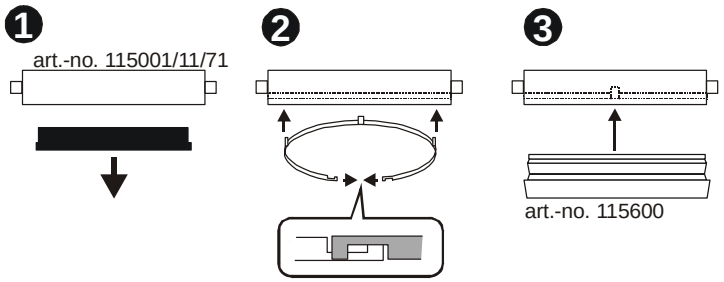

© 2017

SLV GmbH art.-no. 115600 / 115001…11…71

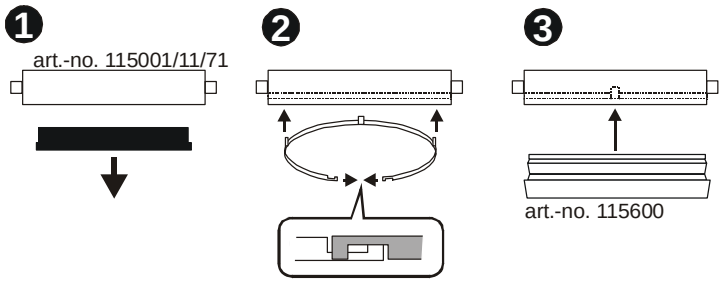

© 2017